* 0000800000001 *

Cambridge Assessment International Education

Cambridge International AS & A Level

CANDIDATE NAME

CENTRE NUMBER

CANDIDATE NUMBER

3760080597

PHYSICS **9702/52**

Paper 5 Planning, Analysis and Evaluation **May/June 2025**

1 hour 15 minutes

You must answer on the question paper.

No additional materials are needed.

INSTRUCTIONS

- Answer **all** questions.
- Use a black or dark blue pen. You may use an HB pencil for any diagrams or graphs.
- Write your name, centre number and candidate number in the boxes at the top of the page.
- Write your answer to each question in the space provided.
- Do **not** use an erasable pen or correction fluid.
- Do **not** write on any bar codes.
- You may use a calculator.
- You should show all your working and use appropriate units.

INFORMATION

- The total mark for this paper is 30.
- The number of marks for each question or part question is shown in brackets [ ].

This document has **8** pages.

DC (DE/CT) 342384/3
© UCLES 2025

[Turn over

1 A thin solid disc of radius r and thickness z is attached to a thin axle. String is wrapped around the axle, as shown in Fig. 1.1.

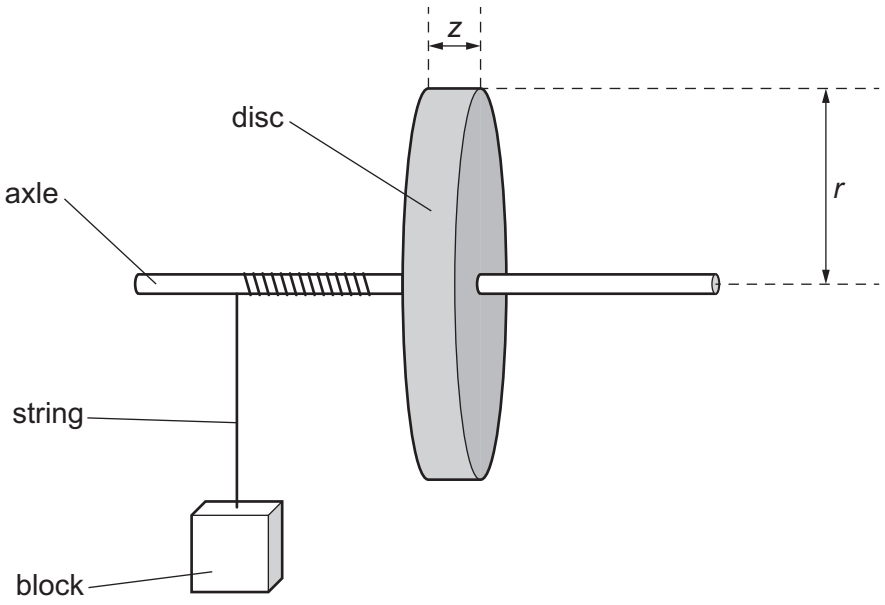

Fig. 1.1

A block of mass m is attached to the string.

The block is released from rest and falls downwards. The block has speed v when it has fallen through a distance h from the point of release. The value of v is determined using **one** light gate connected to a timer.

It is suggested that v is related to m by the relationship

$$\frac{h}{v^2} = \frac{\pi r^2 z}{2PQm} + \frac{1}{P}$$

where P and Q are constants.

Plan a laboratory experiment to test the relationship between v and m.

Draw a diagram showing the arrangement of your equipment.

Explain how the results could be used to determine values for P and Q.

In your plan you should include:

- the procedure to be followed
- the measurements to be taken
- the control of variables
- the analysis of the data
- any safety precautions to be taken.

DO NOT WRITE IN THIS MARGIN

Diagram

DO NOT WRITE IN THIS MARGIN
DO NOT WRITE IN THIS MARGIN
DO NOT WRITE IN THIS MARGIN
DO NOT WRITE IN THIS MARGIN
DO NOT WRITE IN THIS MARGIN

.....

.....

.....

2 A student investigates a circuit containing capacitors. The circuit is connected with a capacitor of capacitance *A*, as shown in Fig. 2.1.

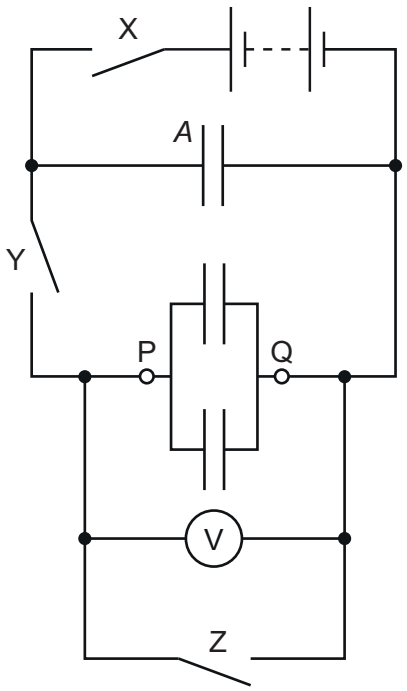

Fig. 2.1

Two capacitors, each of capacitance *C*, are connected in parallel between P and Q.

Initially, switch X and switch Z are closed and switch Y is open.

Switches X and Z are opened. Switch Y is then closed. The maximum potential difference between P and Q is measured using the voltmeter. This procedure is repeated and the mean maximum potential difference *V* between P and Q is determined.

The experiment is then repeated by changing the number *n* of capacitors, each of capacitance *C*, connected in parallel between P and Q.

It is suggested that *V* and *n* are related by the equation

$$EA = V(nC + A)$$

where *E* is the electromotive force (e.m.f.) of the battery.

(a) A graph is plotted of $\frac{1}{V}$ on the *y*-axis against *n* on the *x*-axis.

Determine expressions for the gradient and *y*-intercept.

gradient = ...

y-intercept = ...

[1]

DO NOT WRITE IN THIS MARGIN
DO NOT WRITE IN THIS MARGIN
DO NOT WRITE IN THIS MARGIN
DO NOT WRITE IN THIS MARGIN
DO NOT WRITE IN THIS MARGIN

(b) Values of n and the two measured values of the maximum potential difference V_1 and V_2 are given in Table 2.1.

Table 2.1

n	V_1/V	V_2/V	V/V	$\frac{1}{V}$/V^{-1}
2	4.30	4.20		
3	3.65	3.75		
4	3.30	3.20		
5	2.85	2.95		
6	2.65	2.55		
7	2.30	2.40		

Calculate and record values of V/V and $\frac{1}{V}$/V^{-1} in Table 2.1. Include the absolute uncertainties in V and $\frac{1}{V}$. [2]

(c) **(i)** Plot a graph of $\frac{1}{V}$/V^{-1} against n. Include error bars for $\frac{1}{V}$. [2]

(ii) Draw the straight line of best fit and a worst acceptable straight line on your graph. Label both lines. [2]

(iii) Determine the gradient of the line of best fit. Include the absolute uncertainty in your answer.

gradient = ... [2]

DO NOT WRITE IN THIS MARGIN
DO NOT WRITE IN THIS MARGIN
DO NOT WRITE IN THIS MARGIN
DO NOT WRITE IN THIS MARGIN
DO NOT WRITE IN THIS MARGIN

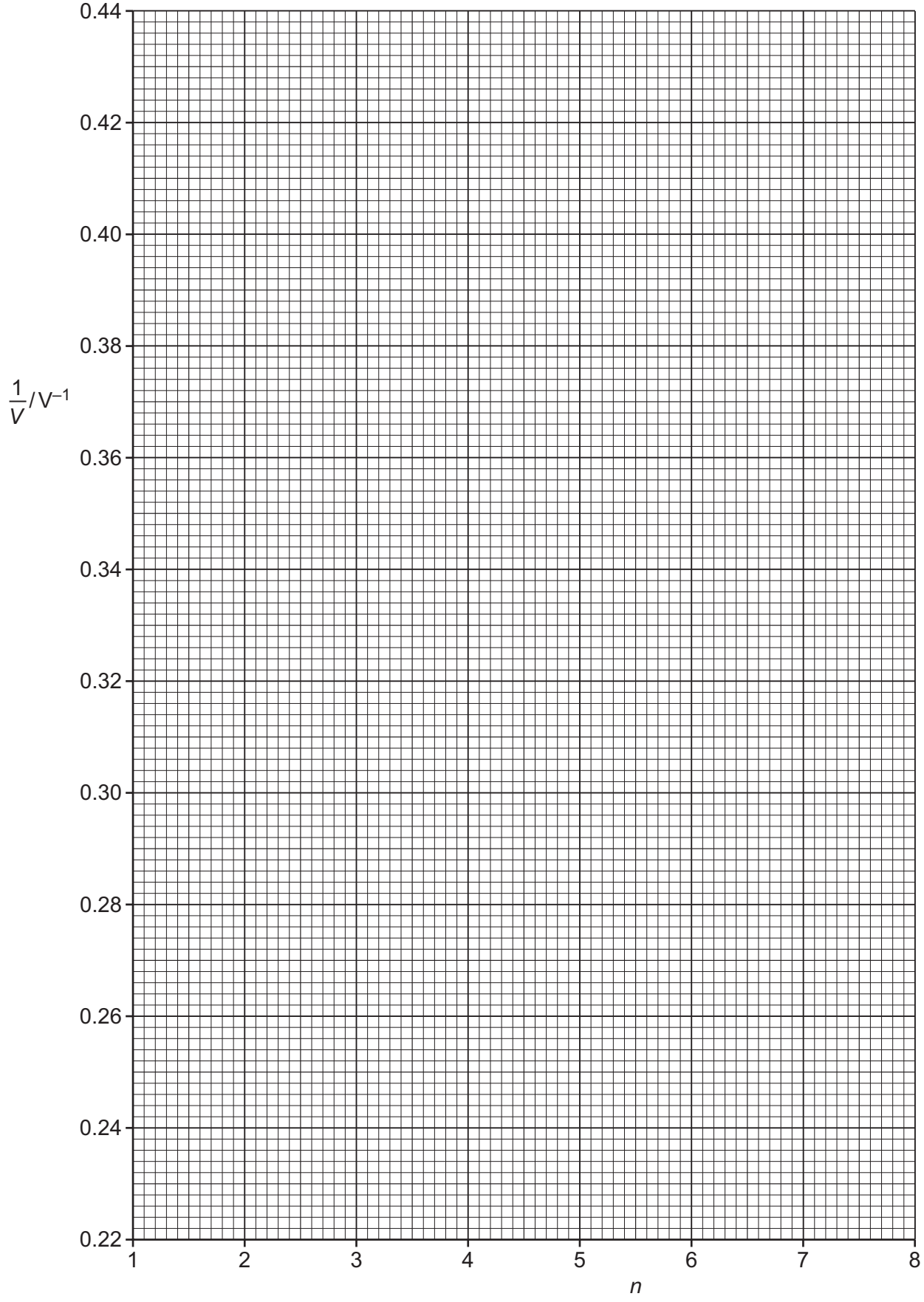

DO NOT WRITE IN THIS MARGIN
DO NOT WRITE IN THIS MARGIN
DO NOT WRITE IN THIS MARGIN
DO NOT WRITE IN THIS MARGIN
DO NOT WRITE IN THIS MARGIN

(iv) Determine the *y*-intercept of the line of best fit. Include the absolute uncertainty in your answer.

y-intercept = ... [2]

(d) (i) Using your answers to **(a)**, **(c)(iii)** and **(c)(iv)**, determine the values of *E* and *C*. Include appropriate units.

Data: $A = (2.2 \pm 0.2)\,\text{mF}$

E = ...

C = ...
[2]

(ii) Determine the percentage uncertainty in your value of *C*.

percentage uncertainty = ...% [1]

(e) The experiment is repeated with 10 capacitors, each of capacitance *C*, connected in parallel between P and Q. Determine the maximum potential difference *V* between P and Q.

V = ...V [1]

[Total: 15]

To avoid the issue of disclosure of answer-related information to candidates, all copyright acknowledgements are reproduced online in the Cambridge Assessment International Education Copyright Acknowledgements Booklet. This is produced for each series of examinations and is freely available to download at www.cambridgeinternational.org after the live examination series.

DO NOT WRITE IN THIS MARGIN
DO NOT WRITE IN THIS MARGIN
DO NOT WRITE IN THIS MARGIN
DO NOT WRITE IN THIS MARGIN
DO NOT WRITE IN THIS MARGIN